McArthur Evo

101.6mm CENTRE POCKET FRAMING

alspec® EVERYTHING ALUMINIUM & HARDWARE

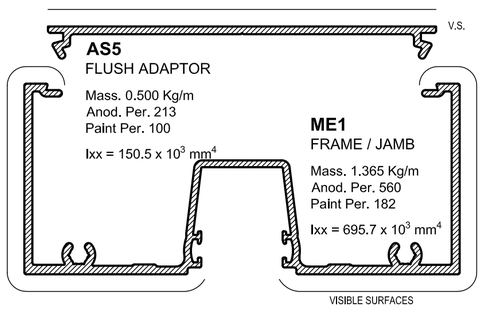

AS5
FLUSH ADAPTOR
Mass. 0.500 Kg/m
Anod. Per. 213
Paint Per. 100
Ixx = 150.5 x 10^3 mm^4

ME1
FRAME / JAMB
Mass. 1.365 Kg/m
Anod. Per. 560
Paint Per. 182
Ixx = 695.7 x 10^3 mm^4

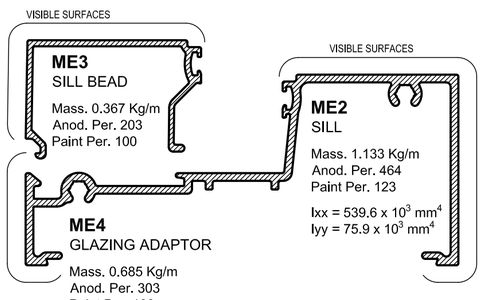

ME3
SILL BEAD
Mass. 0.367 Kg/m
Anod. Per. 203
Paint Per. 100

ME2
SILL
Mass. 1.133 Kg/m
Anod. Per. 464
Paint Per. 123
Ixx = 539.6 x 10^3 mm^4
Iyy = 75.9 x 10^3 mm^4

ME4
GLAZING ADAPTOR
Mass. 0.685 Kg/m
Anod. Per. 303
Paint Per. 100
Ixx = 187.7 x 10^3 mm^4

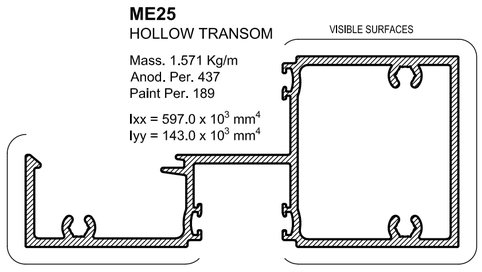

ME25
HOLLOW TRANSOM
Mass. 1.571 Kg/m
Anod. Per. 437
Paint Per. 189
Ixx = 597.0 x 10^3 mm^4
Iyy = 143.0 x 10^3 mm^4

ME24
25mm NARROW FRAME
Mass. 1.140 Kg/m
Anod. Per. 468
Paint Per. 127

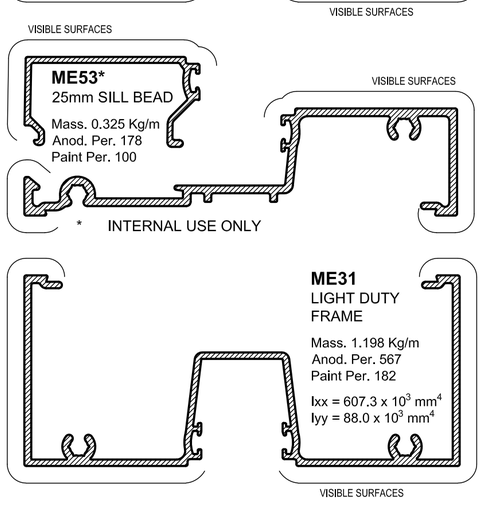

ME53*
25mm SILL BEAD
Mass. 0.325 Kg/m
Anod. Per. 178
Paint Per. 100

ME52*
25mm SILL
Mass. 0.931 Kg/m
Anod. Per. 379
Paint Per. 100
Ixx = 377.6 x 10^3 mm^4
Iyy = 25.8 x 10^3 mm^4

* INTERNAL USE ONLY

ME31
LIGHT DUTY FRAME
Mass. 1.198 Kg/m
Anod. Per. 567
Paint Per. 182
Ixx = 607.3 x 10^3 mm^4
Iyy = 88.0 x 10^3 mm^4

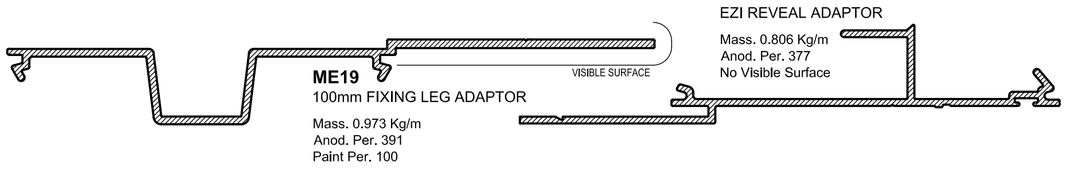

ME19
100mm FIXING LEG ADAPTOR
Mass. 0.973 Kg/m
Anod. Per. 391
Paint Per. 100

ECO218
EZI REVEAL ADAPTOR
Mass. 0.806 Kg/m
Anod. Per. 377
No Visible Surface

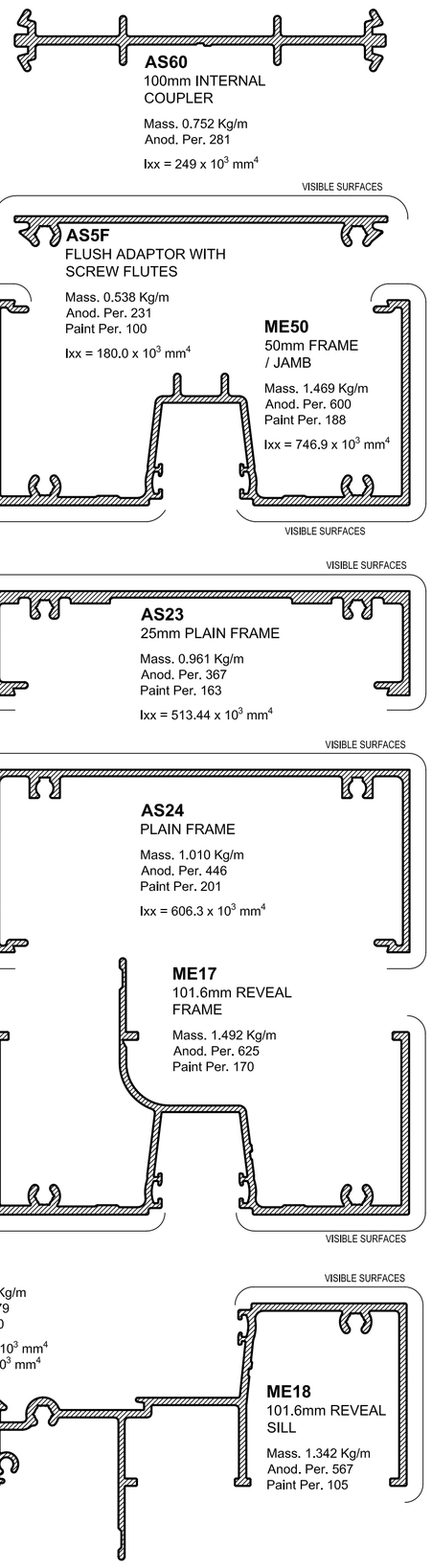

AS60
100mm INTERNAL COUPLER
Mass. 0.752 Kg/m
Anod. Per. 281
Ixx = 249 x 10^3 mm^4

AS5F
FLUSH ADAPTOR WITH SCREW FLUTES
Mass. 0.538 Kg/m
Anod. Per. 231
Paint Per. 100
Ixx = 180.0 x 10^3 mm^4

ME50
50mm FRAME / JAMB
Mass. 1.469 Kg/m
Anod. Per. 600
Paint Per. 188
Ixx = 746.9 x 10^3 mm^4

AS23
25mm PLAIN FRAME
Mass. 0.961 Kg/m
Anod. Per. 367
Paint Per. 163
Ixx = 513.44 x 10^3 mm^4

AS24
PLAIN FRAME
Mass. 1.010 Kg/m
Anod. Per. 446
Paint Per. 201
Ixx = 606.3 x 10^3 mm^4

ME17
101.6mm REVEAL FRAME
Mass. 1.492 Kg/m
Anod. Per. 625
Paint Per. 170

ME18
101.6mm REVEAL SILL
Mass. 1.342 Kg/m
Anod. Per. 567
Paint Per. 105

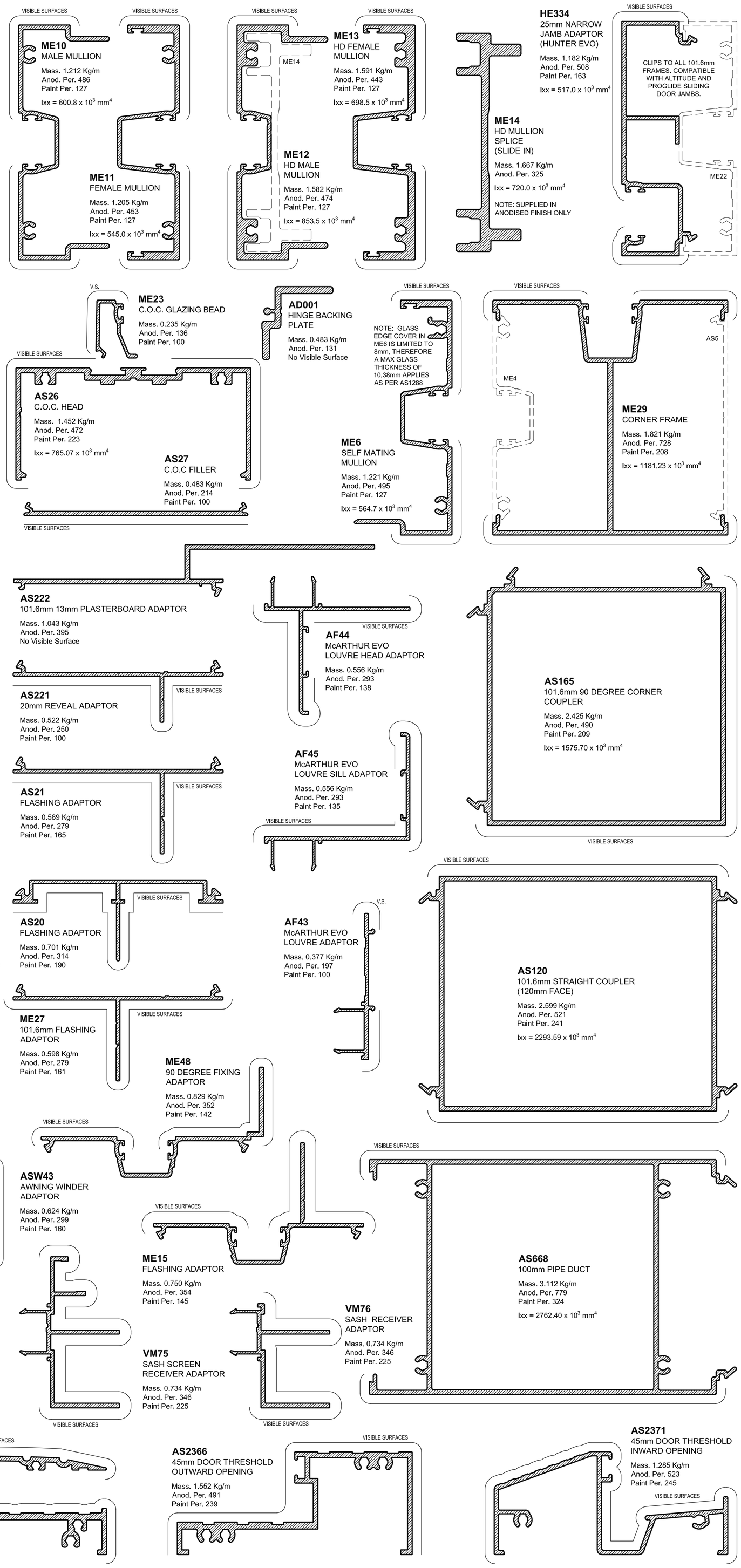
VISIBLE SURFACES
VISIBLE SURFACES
VISIBLE SURFACES
VISIBLE SURFACES
VISIBLE SURFACES
VISIBLE SURFACES
VISIBLE SURFACES

McArthur Evo

150mm CENTRE POCKET FRAMING

alspec® EVERYTHING ALUMINIUM & HARDWARE

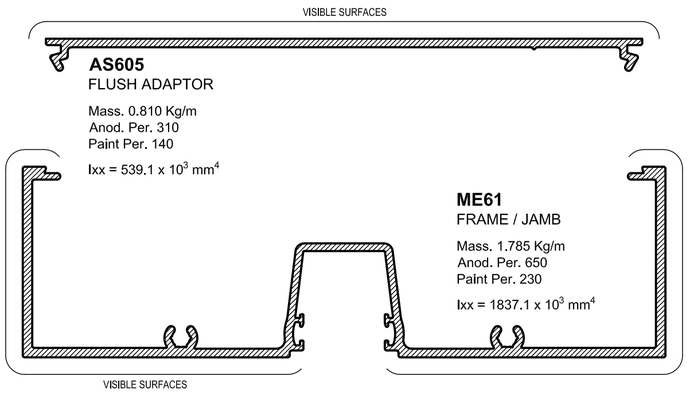

AS605
FLUSH ADAPTOR

Mass. 0.810 Kg/m
Anod. Per. 310
Paint Per. 140

Ixx = 539.1 x 10^3 mm^4

ME61
FRAME / JAMB

Mass. 1.785 Kg/m
Anod. Per. 650
Paint Per. 230

Ixx = 1837.1 x 10^3 mm^4

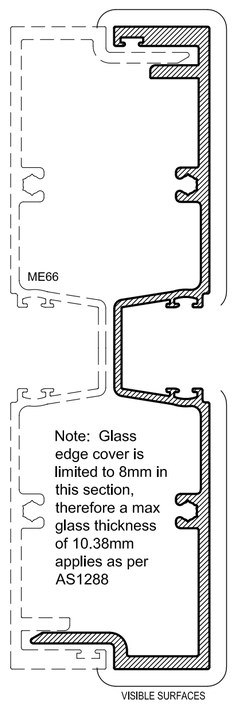

ME66
SELF MATING MULLION

Mass. 1.869 Kg/m
Anod. Per. 593
Paint Per. 182

Ixx = 1933.7 x 10^3 mm^4

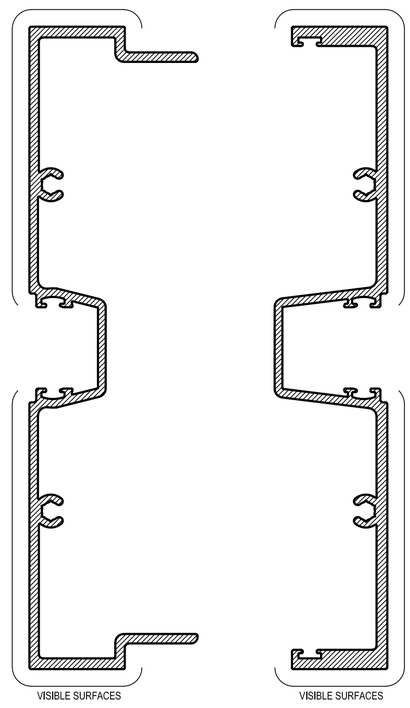

ME67
MALE MULLION

Mass. 1.682 Kg/m
Anod. Per. 588
Paint Per. 180

Ixx = 1688.5 x 10^3 mm^4

ME68
FEMALE MULLION

Mass. 1.789 Kg/m
Anod. Per. 546
Paint Per. 180

Ixx = 1624.0 x 10^3 mm^4

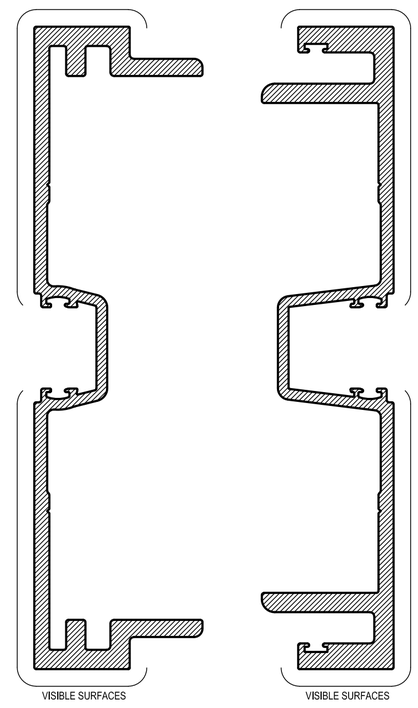

ME69
HD MALE MULLION

Mass. 2.655 Kg/m
Anod. Per. 568
Paint Per. 182

Ixx = 3018.1 x 10^3 mm^4

ME70
HD FEMALE MULLION

Mass. 2.882 Kg/m
Anod. Per. 605
Paint Per. 180

Ixx = 2983.6 x 10^3 mm^4

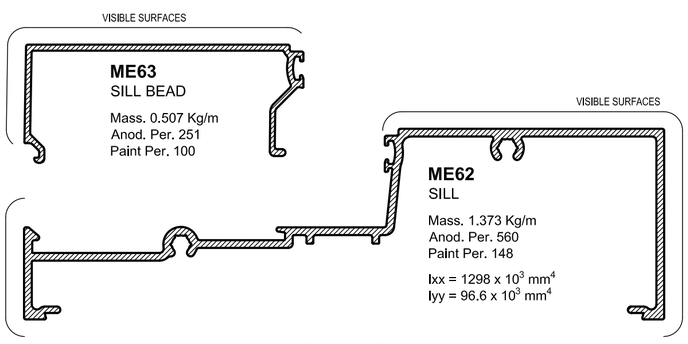

ME63
SILL BEAD

Mass. 0.507 Kg/m
Anod. Per. 251
Paint Per. 100

ME62
SILL

Mass. 1.373 Kg/m
Anod. Per. 560
Paint Per. 148

Ixx = 1298 x 10^3 mm^4
Iyy = 96.6 x 10^3 mm^4

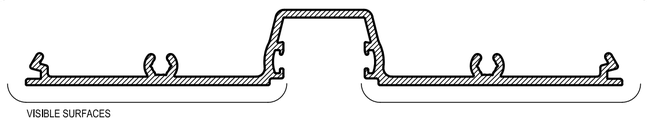

ME64
GLAZING ADAPTOR

Mass. 1.080 Kg/m
Anod. Per. 423
Paint Per. 121

Ixx = 605.4 x 10^3 mm^4

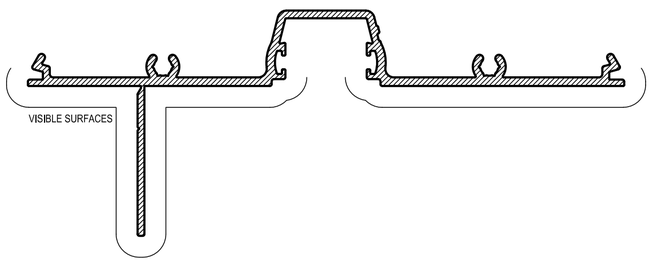

ME73
150mm FLASHING ADAPTOR

Mass. 1.229 Kg/m
Anod. Per. 494
Paint Per. 194

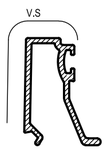

ME23
C.O.C. GLAZING BEAD

Mass. 0.235 Kg/m
Anod. Per. 136
Paint Per. 100

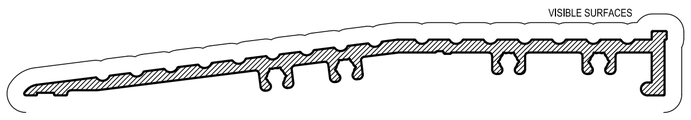

AS1857
150mm DISABLED RAMP THRESHOLD

Mass. 1.439 Kg/m
Anod. Per. 422
Paint Per. 181

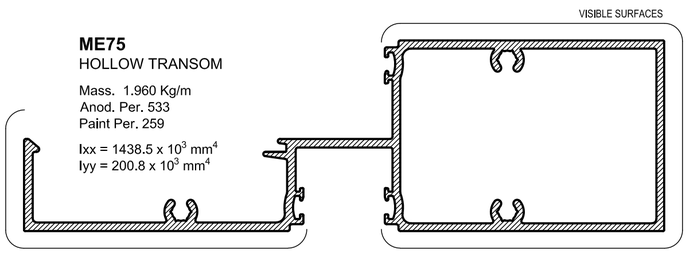

ME75
HOLLOW TRANSOM

Mass. 1.960 Kg/m
Anod. Per. 533
Paint Per. 259

Ixx = 1438.5 x 10^3 mm^4
Iyy = 200.8 x 10^3 mm^4

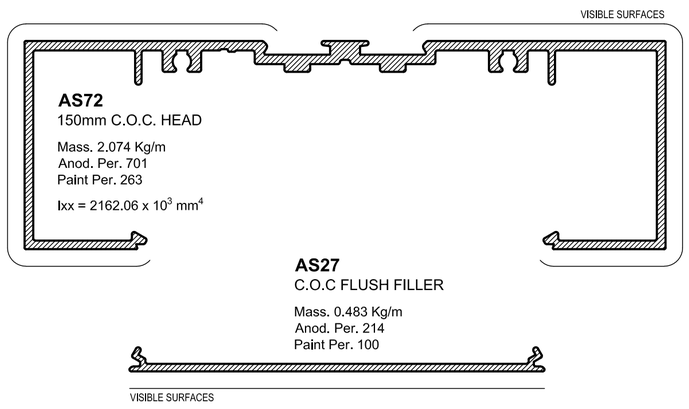

AS72
150mm C.O.C. HEAD

Mass. 2.074 Kg/m
Anod. Per. 701
Paint Per. 263

Ixx = 2162.06 x 10^3 mm^4

AS27
C.O.C FLUSH FILLER

Mass. 0.483 Kg/m
Anod. Per. 214
Paint Per. 100

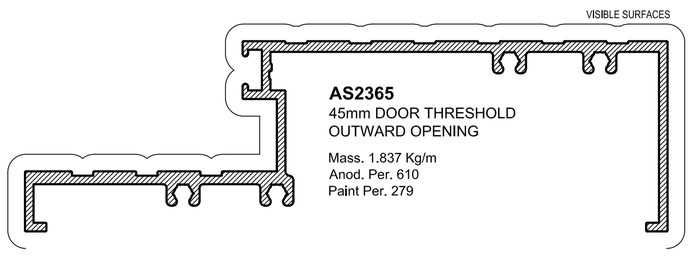

AS2365
45mm DOOR THRESHOLD OUTWARD OPENING

Mass. 1.837 Kg/m
Anod. Per. 610
Paint Per. 279

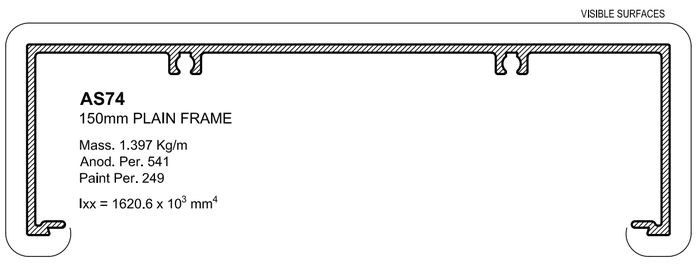

AS74
150mm PLAIN FRAME

Mass. 1.397 Kg/m
Anod. Per. 541
Paint Per. 249

Ixx = 1620.6 x 10^3 mm^4

ME80
50mm SASH ADAPTOR

Mass. 0.429 Kg/m
Anod. Per. 204
Paint Per. 100

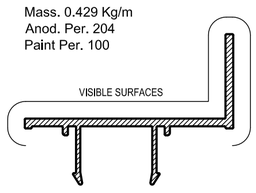

ME82
35mm SASH ADAPTOR

Mass. 0.504 Kg/m
Anod. Per. 235
Paint Per. 108

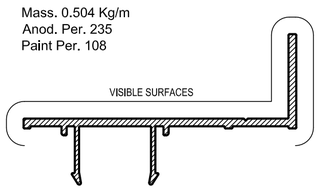

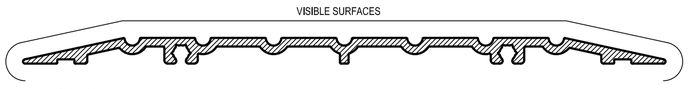

AS1802
150mm LOW PROFILE THRESHOLD

Mass. 0.990 Kg/m
Anod. Per. 365
Paint Per. 167

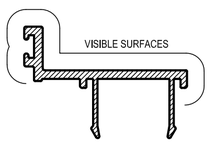

ME85
45mm DOOR STOP (FOR 150mm FRAME)

Mass. 0.376 Kg/m
Anod. Per. 171
Paint Per. 100

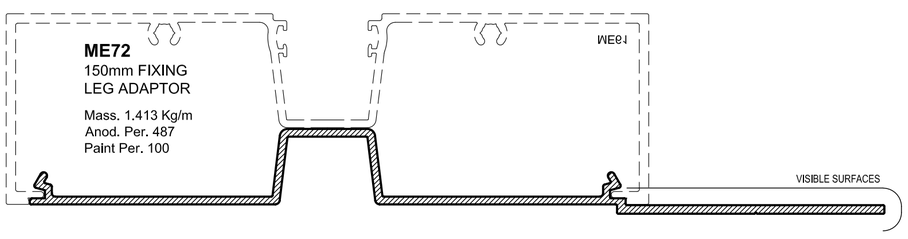

ASW43
AWNING WINDER ADAPTOR

Mass. 0.624 Kg/m
Anod. Per. 299
Paint Per. 160

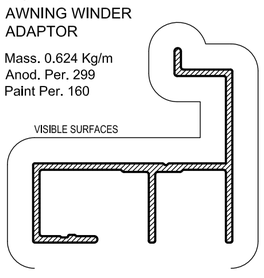

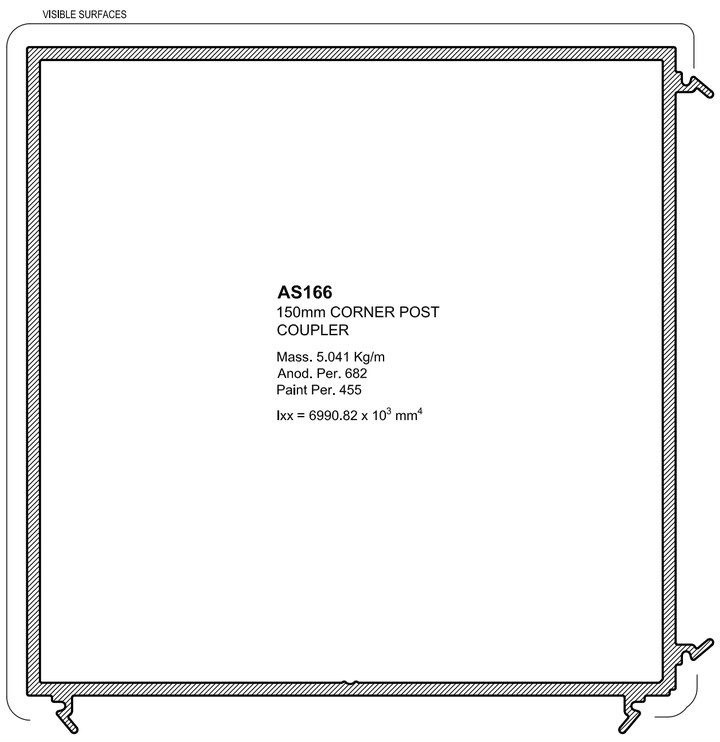

AS166
150mm CORNER POST COUPLER

Mass. 5.041 Kg/m
Anod. Per. 682
Paint Per. 455

Ixx = 6990.82 x 10^3 mm^4

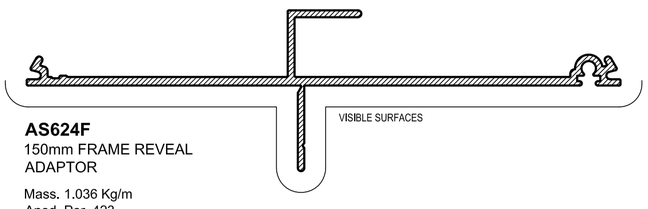

AS624F
150mm FRAME REVEAL ADAPTOR

Mass. 1.036 Kg/m
Anod. Per. 423
Paint Per. 195

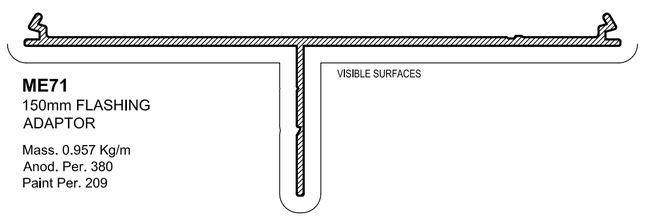

ME71
150mm FLASHING ADAPTOR

Mass. 0.957 Kg/m
Anod. Per. 380
Paint Per. 209

SYDNEY BRANCH
3 Alspec Place
Eastern Creek NSW 2766
Ph: 02 9834 9500
Fax: 02 9834 9555
sydney@alspec.com.au

MELBOURNE BRANCH
26–40 Pound Road West
Dandenong South VIC 3175
Phone: 03 8787 6333
Fax: 03 8787 6399
melbourne@alspec.com.au

ADELAIDE BRANCH
1 Pope Court
Beverley SA 5009
Phone: 08 8150 6960
Fax: 08 8150 6999
adelaide@alspec.com.au

PERTH BRANCH
30 Holder Way
Malaga WA 6090
Phone: 08 9209 9100
Fax: 08 9209 9199
perth@alspec.com.au

BRISBANE BRANCH
8 – 22 Jutland Street
Loganlea QLD 4131
Phone: 07 3089 4900
Fax: 07 3089 4999
brisbane@alspec.com.au

NEWCASTLE BRANCH
95 Griffiths Road
Lambton NSW 2299
Phone: 02 4952 9111
Fax: 02 4952 9728
newcastle@alspec.com.au

CAIRNS BRANCH
34–38 Hargreaves Street
Edmonton QLD 4869
Phone: 07 4037 6666
Fax: 07 4037 6699
cairns@alspec.com.au

TOWNSVILLE BRANCH
21 Carroll Street
Mount Louisa QLD 4814
Phone: 07 3089 4965
Fax: 1300 131 747
townsville@alspec.com.au

BUNDABERG BRANCH
17 Production Street
Svensson Heights QLD 4670
Phone: 07 4111 2000
Fax: 07 4111 2099
bundaberg@alspec.com.au

BRENDALE BRANCH
24 Doherty Street
Brendale QLD 4500
Phone: 07 3205 9911
Fax: 07 3205 9915
brendale@alspec.com.au

SUNSHINE COAST BRANCH
4-8 Empire Crescent
Chevallum QLD 4555
Phone: 07 5437 6123
Fax: 07 5437 6124
chevallum@alspec.com.au

CANBERRA BRANCH
28 Sheppard Street
Hume ACT 2620
Phone: 02 5134 3300
canberra@alspec.com.au

DARWIN BRANCH
25 Bishop Street
Woolner NT 0820
Phone: 08 8941 7300
darwin@alspec.com.au

1300 ALSPEC (257732)

alspec.com.au